ProLabs – ZX-SFP-CWDM-1470-NC

1.25GBd SFP (Small Form Pluggable) CWDM (1470nm – 1610nm) Transceiver 23dB Margin

ZX-SFP-CWDM-1470-NC Overview

ProLabs's ZX-SFP-CWDM-1470-NC CWDM SFP optical transceivers are designed for operation in Metro Access Rings and Point to Point networks using Gigabit Ethernet and Fiber Channel networking equipment. They are available in 8 different CWDM wavelengths, from 1470nm to 1610nm. Digital diagnostics functions are available via a 2 wire serial bus. In addition, they comply to the small form factor pluggable multi sourcing agreement (MSA) and SFF-8472.

Product Features

- Up to 1.25 GBd bi-directional data links
- Compliant with IEEE 802.3z Gigabit Ethernet standard
- Compliant with Fiber Channel 100-SM-LC-L standard
- Industry standard small form pluaggable (SFP) package
- Compliant with SFP MSA
- Hot-pluggable SFP footprint
- Uncooled DFB laser transmitter in 8 possible CWDM wavelengths
- Receiver with PIN
- Duplex LC connector
- Built-in digital diagnostic functions
- Up to 80km on 9/125um SMF
- Single power supply 3.3V
- RoHS Compliance
- Class 1 laser product complies with EN 60825-1
- Operating temperature range: 0℃ to 70℃.

Applications

- 1.25 GBd Gigabit Ethernet
- 1.063 GBd Fiber Channel

Product Selection

ZX-SFP-CWDM-XXXX-NC		ZX-SFP-CWDM-XXXX-NC		ZX-SFP-CWDM-XXXX-NC		ZX-SFP-CWDM-XXXX-NC	
Wavelengths	**xxxx**	**Wavelengths**	**xxxx**	**Wavelengths**	**xxxx**	**Wavelengths**	**xxxx**
1470nm	1470	1510nm	1510	1550nm	1550	1590nm	1590
1490nm	1490	1530nm	1530	1570nm	1570	1610nm	1610

Product Identify – By Color on Clasp

ZX-SFP-CWDM-XXXX-NC		ZX-SFP-CWDM-XXXX-NC		ZX-SFP-CWDM-XXXX-NC		ZX-SFP-CWDM-XXXX-NC	
Wavelengths	**Color**	**Wavelengths**	**Color**	**Wavelengths**	**Color**	**Wavelengths**	**Color**
1470nm	Gray	1510nm	Blue	1550nm	Yellow	1590nm	Red
1490nm	Violet	1530nm	Green	1570nm	Orange	1610nm	Brown

Ordering Information

Part Number	Description
ZX-SFP-NCWDM-1470-C	GE/FC SFP CWDM 1470nm SMF 23dB 80km with DOM function
ZX-SFP-NCWDM-1490-C	GE/FC SFP CWDM 1490nm SMF 23dB 80km with DOM function
ZX-SFP-NCWDM-1510-C	GE/FC SFP CWDM 1510nm SMF 23dB 80km with DOM function
ZX-SFP-NCWDM-1530-C	GE/FC SFP CWDM 1530nm SMF 23dB 80km with DOM function
ZX-SFP-NCWDM-1550-C	GE/FC SFP CWDM 1550nm SMF 23dB 80km with DOM function
ZX-SFP-NCWDM-1570-C	GE/FC SFP CWDM 1570nm SMF 23dB 80km with DOM function
ZX-SFP-NCWDM-1590-C	GE/FC SFP CWDM 1590nm SMF 23dB 80km with DOM function
ZX-SFP-NCWDM-1610-C	GE/FC SFP CWDM 1610nm SMF 23dB 80km with DOM function

General Specifications

Parameter	Symbol	Min	Typ	Max	Unit	Remarks
Data Rate	DR	0.622		1.25	GBd	
Bit Error Rate	BER			10^{-12}		
Operating Temperature	T_{OP}	0		70	℃	Case temperature
Storage Temperature	T_{STO}	– 40		85	℃	Ambient temperature
Operating Current	I_{OP}			400	mA	Absolute Rating
Supply Current	I_S		200	300	mA	For electrical power interface
Input Voltage	V_{CC}	3.1	3.3	3.6	V	
Maximum Voltage	V_{MAX}	– 0.5		6	V	For electrical power interface

Optical Characteristics – Transmitter

V_{CC}=3.1V to 3.6V, T_C=0℃ to 70℃

Parameter	Symbol	Min	Typ	Max	Unit	Remarks
Output Optical Power	P_{TX}	0		5	dBm	Class 1 Product
Optical Center Wavelength – 1470nm	λ_C	1466	1471	1477	nm	
Optical Center Wavelength – 1490nm		1486	1491	1497	nm	
Optical Center Wavelength – 1510nm		1506	1511	1517	nm	
Optical Center Wavelength – 1530nm		1526	1531	1537	nm	
Optical Center Wavelength – 1550nm		1546	1551	1557	nm	
Optical Center Wavelength – 1570nm		1566	1571	1577	nm	
Optical Center Wavelength – 1590nm		1586	1591	1597	nm	
Optical Center Wavelength – 1610nm		1606	1611	1617	nm	
Wavelength Temperature Dependance			0.08	0.125	nm/℃	
Extinction Ratio	ER	9			dB	
SideMode Supression ratio	$SMSR$	30			dB	
Spectral Width (– 20dB)	$\Delta\lambda$			1	nm	
Optical Rise/Fall Time (20% - 80%)	T_{RF_IN}			180	ps	
Relative Intensity Noise	RIN			– 120	dB/Hz	
Transmitter Jitter	TJ			100	ps	
Output Eye	Compliant with IEEE 802.3z					

Optical Characteristics – Receiver

V_{CC}=3.1V to 3.6V, T_C=0℃ to 70℃

Parameter	Symbol	Min	Typ	Max	Unit	Remarks
Optical Receiver Power	P_{RX}	0			dBm	
Optical Center Wavelength	λ_C	1270		1620	nm	
Receiver Sensitivity @ 1.25GBd	R_{X_SEN}			– 23	dBm	Measured with a PRBS 2^7-1 test pattern, @ 1.25GBd,BER<10^{-12}
Optical Return Loss	*ORL*	12			dB	
Loss of Signal-Asserted	P_{LOS_A}	– 30			dBm	
Loss of Signal-Deasserted	P_{LOS_D}			– 19	dBm	
Loss of Signal-Hysteresis			1		dB	
Receiver Jitter Generation @ 1.25GBd				160	ps	Measured at –23dB average Rx sensitivity, PRBS 2^7-1 test pattern

Electrical Characteristics – Transmitter

V_{CC}=3.1V to 3.6V, T_C=0℃ to 70℃

Parameter	Symbol	Min	Typ	Max	Unit	Remarks
Input differential impedance	R_{IN}		100		Ω	AC Coupled
Single ended data input swing	V_{IN_PP}	250		1200	mV	
Transmit disable voltage	V_D	V_{CC}–1.3		V_{CC}	V	
Transmit enable voltage	V_{EN}	V_{EE}		V_{EE}+0.8	V	
Transmit disable assert time				10	us	

Electrical Characteristics – Receiver

V_{CC}=3.1V to 3.6V, T_C=0℃ to 70℃

Parameter	Symbol	Min	Typ	Max	Unit	Remarks
Single ended data output swing	V_{OUT_PP}	250		800	mV	
Data output rise/fall time (20%-80%)	T_R		100	175	ps	
LOS Fault	V_{LOS_Fault}	V_{CC}–0.5		V_{CC_HOST}	V	
LOS Normal	V_{LOS_normal}	V_{EE}		V_{EE}+0.5	V	
Power Supply Rejection	*PSR*	100			mV_{PP}	

Digital Diagnostic Functions

ZX-SFP-CWDM-1470-NC support the 2-wire serial communication protocol as defined in the SFP MSA. Digital diagnostic information are accessible over the 2-wire interface at the address 0xA2. Digital Diagnostics for ZX-SFP-NCWDM-XXXX-NC are internally calibrated by default. A micro controller unit inside the transceiver gathers the monitoring information and reports the status of transceiver.

Transceiver Temperature, internally measured, represented as a 16 bit signed twos complement value in increments of 1/256 degrees Celsius, Temperature accuracy is better than ±3 degrees Celsius over specified operating temperature and voltage.
Transceiver Supply Power, internally measured, represented as a 16 bit unsigned integer with the voltage defined as the full 16 bit value (0 – 65535) with LSB equal to 100 µVolt, yielding a total range of 0 to +6.55 Volts.

Transceiver TX bias current, internally measured, represented as a 16 bit unsigned integer with the current defined as the full 16 bit value (0 – 65535) with LSB equal to 2 µA, yielding a total range of 0 to 131mA. Accuracy is better than ±10% over specified operating temperature and voltage.

Transceiver TX output power, internally measured, represented as a 16 bit unsigned integer with the power defined as the full 16 bit value (0 – 65535) with LSB equal to 0.1 µW. Data is assumed to be based on measurement of laser monitor photodiode current. Accuracy is better than ±3dB over specified temperature and voltage. Data is not valid when the transmitter is disabled.

Transceiver RX received optical power, internally measured, represented as a 16 bit unsigned integer with the power defined as the full 16 bit 35 value (0 – 65535) with LSB equal to 0.1 µW. Accuracy is better than ±3dB over specified temperature and voltage.

Block Diagram of Transceiver

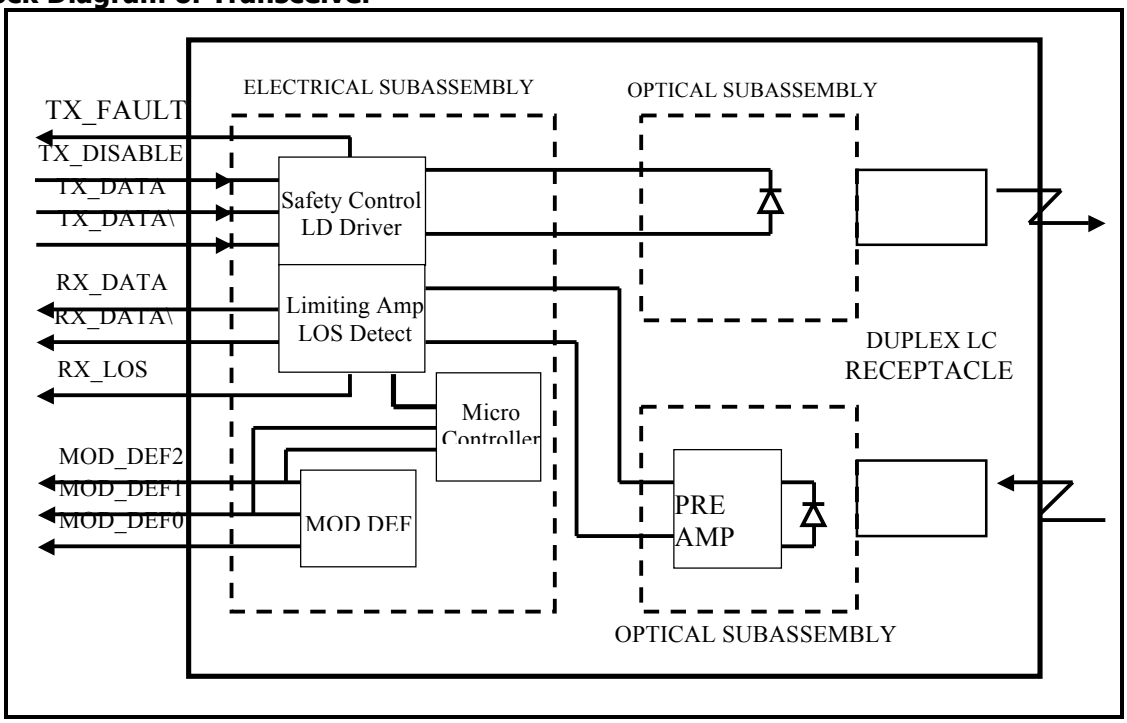

Transmitter Section
The DFB driver accept differential input data and provide bias and modulation currents for driving a laser. An automatic power-NControl (APC) feedback loop is incorporated to maintain a constant average optical power. DFB laser in an eye safe optical subassembly (OSA) mates to the fiber cable.
TX_DISABLE
The TX_DISABLE signal is high (TTL logic "1") to turn off the laser output. The laser will turn on within 1ms when TX_DISABLE is low (TTL logic "0").
TX_FAULT
When the TX_FAULT signal is high, output indicates a laser fault of some kind. Low indicates normal operation.

Receiver Section
The receiver utilizes a PIN detector integrated with a trans-impedance preamplifier in an OSA. This OSA is connected to a Limiting Amplifier which providing post-amplification quantization, and optical signal detection. The limiting Amplifier is AC-NCoupled to the transimpedance amplifier, with internal 100Ω differential termination.
Receive Loss (RX_LOS)
The RX_LOS is high (logic "1") when there is no incoming light from the companion transceiver. This signal is normally used by the system for the diagnostic purpose. The signal is operated in TTL level.

Controller Section
The micro controller unit monitors the operation information of LD driver and Limiting Amplifier. And report these status to the customer.

Dimensions

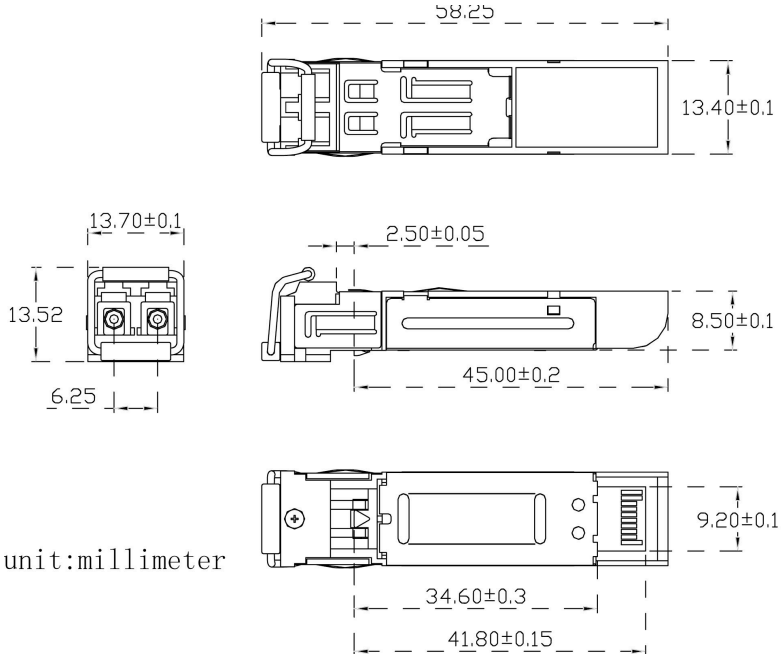

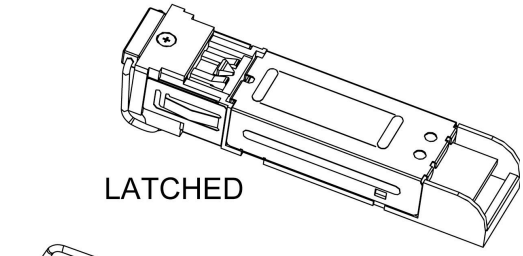

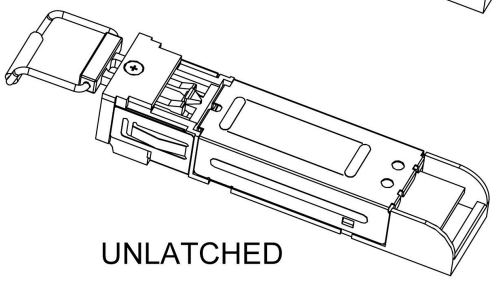

ALL DIMENSIONS ARE ±0.2mm UNLESS OTHERWISE SPECIFIED
UNIT: mm

PCB Layout Recommendation

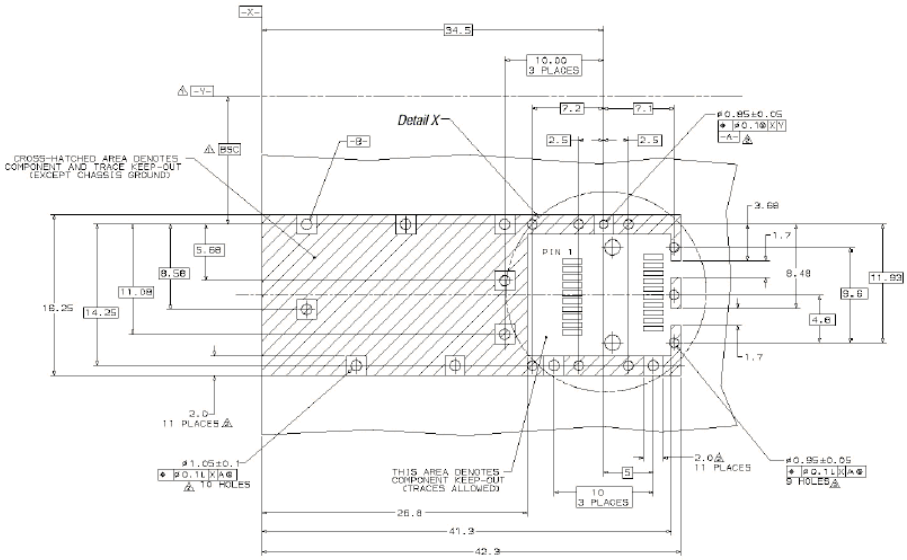

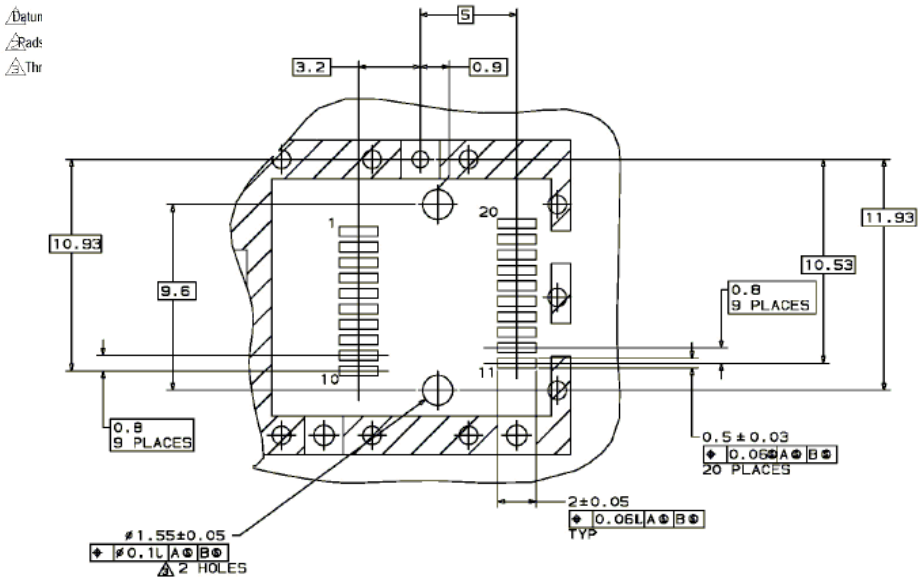

Electrical Pad Layout

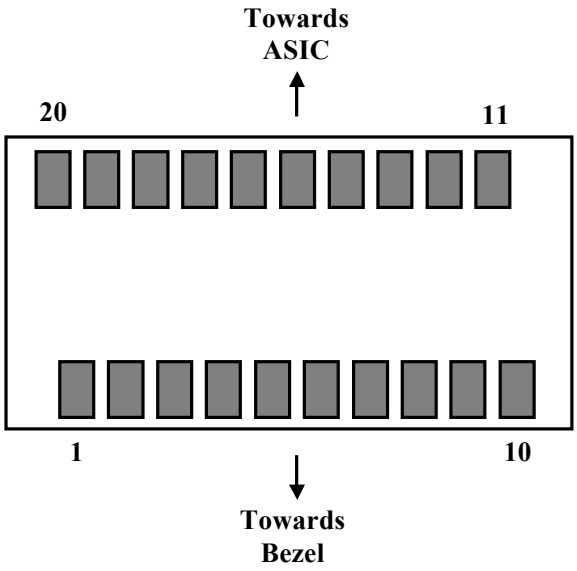

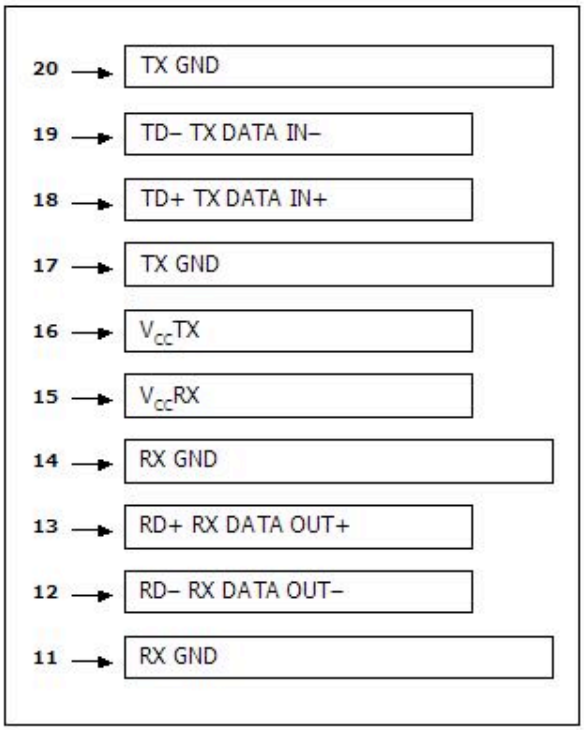

Top of Board

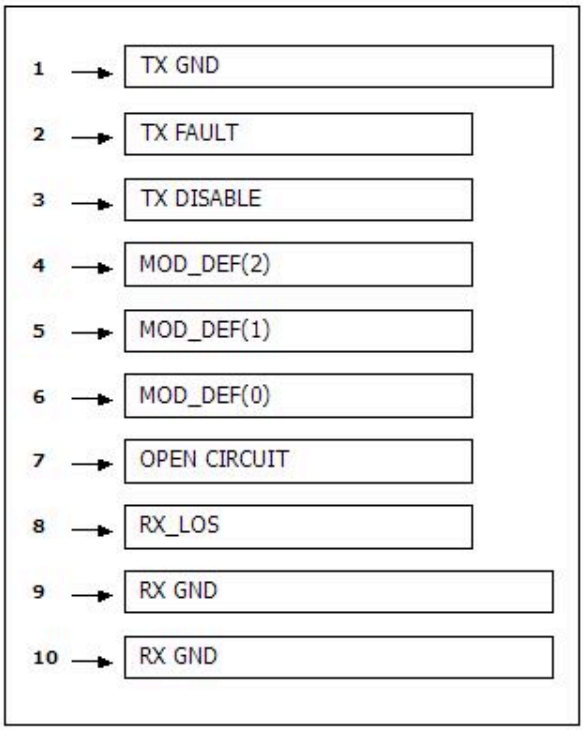

Bottom of Board

Pin Assignment

PIN #	*Symbol*	*Description*	*Remarks*
1	V_{EET}	Transmitter ground (common with receiver ground)	Circuit ground is isolated from chassis ground
2	T_{FAULT}	Transmitter Fault. Not supported	
3	T_{DIS}	Transmitter Disable. Laser output disable on high or open	Disabled: T_{DIS}>2V or open Enabled: T_{DIS}<0.8V
4	MOD_DEF (2)	Module Definition 2. Data line for serial ID	Should Be pulled up with 4.7k – 10k ohm on host board to a voltage between 2V and 3.6V
5	MOD_DEF (1)	Module Definition 1. Clock line for serial ID	
6	MOD_DEF (0)	Module Definition 0. Grounded within the module	
7	Rate Select	No connection required	
8	LOS	Loss of Signal indication. Logic 0 indicates normal operation	LOS is open collector output
9	V_{EER}	Receiver ground (common with transmitter ground)	Circuit ground is isolated from chassis ground
10	V_{EER}	Receiver ground (common with transmitter ground)	
11	V_{EER}	Receiver ground (common with transmitter ground)	
12	RD–	Receiver Inverted DATA out. AC coupled	
13	RD+	Receiver Non-inverted DATA out. AC coupled	
14	V_{EER}	Receiver ground (common with transmitter ground)	Circuit ground is isolated from chassis ground
15	V_{CCR}	Receiver power supply	
16	V_{CCT}	Transmitter power supply	
17	V_{EET}	Transmitter ground (common with receiver ground)	Circuit ground is connected to chassis ground
18	TD+	Transmitter Non-Inverted DATA in. AC coupled	
19	TD–	Transmitter Inverted DATA in. AC coupled	
20	V_{EET}	Transmitter ground (common with receiver ground)	Circuit ground is connected to chassis ground

References

1. IEEE standard 802.3. IEEE Standard Department, 2002.
2. Small Form Factor Pluggable (SFP) Transceiver Multi-Source Agreement (MSA), September 2000.
3. Fiber Channel Draft Physical Interface Specification (FC-PI 10.0).
4. Digital Diagnostics Monitoring Interface for Optical Transceivers – SFF-8472.
5. Fiber Channel Physical and Signaling Interface (FC-PH/PH2/PH3).
6. Bellcore GR-253 and ITU-T G.957 Specifications.