Smart IP66 PIR Integrated Fixture Mount Sensors with Bluetooth® Connectivity

ZLDUZ

ZLD1Z

OFDxZ with Offset

OFDxZ

Description

Leviton's Smart Fixture Mount Senors (FMS) are designed for use with switching or 0-10V dimmer fixtures. These sensors use advanced digital PIR optics to provide an exceptional Field-of-View (FOV) for mounting heights of 8-40 ft. When motion is detected, the sensor will turn the lights ON. Lights will turn OFF when the space becomes vacant and the timeout expires.

With an IP66 rating, the sensors are designed for indoor or outdoor applications. Up to 16 sensors can be grouped together to operate in unison. The OFDUZ and ZLDUZ models incorporate a time clock and can provide simple scheduling to control operating modes, light levels, timeouts, and daylighting based on the time of day and/or the day of the week to optimize energy savings.

Configuration is made using the Leviton Smart Sensor App from a smartphone or other Bluetooth®-enabled Android or iOS device.

Applications

- Warehouses
- Outdoor lighting
- Parking garages
- Gymnasiums
- Libraries - loading bays
- High-bay applications

Features

- Can be used to comply with IECC, ASHRAE 90.1, and 2025 Title 24, Part 6 occupancy/vacancy sensing and dimming requirements
- IP66 rated (when installed in an appropriate IP66 rated enclosure/fixture) for outdoor or washdown locations
  - Standard Voltage Models: ZLD1Z & OFD1Z:
    - 120-277VAC, 50/60 Hz, 1-pole
  - Universal Voltage Model: ZLDUZ & OFDUZ:
    - 120-347VAC, 50/60 Hz, 1-pole
    - 208-480VAC, 50/60Hz, 2-Pole
- Controls LED lighting loads up to 6.7A:
  - Adjust the sensitivity of the sensor to increase or decrease coverage area
- Adjust timeouts
- Set and configure daylight mode
  - Auto and manual calibration
- Set a security code to lock configuration settings
- Configure dimming options such as high and low trim, partial-OFF, and partial-OFF timeouts

Features, cont'd

- Grouping:
  - Group up to 16 sensors to share occupancy, daylighting, and scheduling (if applicable)
  - Recommended max distance of 50' from sensor to sensor
  - Group size dependent on BLE range, line of sight, and wireless noise; for best results, start group from sensor in the center of the group
- Scheduling — Universal voltage models only:
  - Create schedules to change operation based on types of activities or to maximize energy savings
  - Astronomical time clock with geo-location will accurately keep time including changes to sunrise, sunset, and daylight savings time
  - Change operating mode, light levels, daylighting, timeouts, etc,. based on the time of day and / or day of the week
  - Mixed groups are supported; if scheduling is needed, at least one universal voltage model is needed in the group to run the schedule
- 360° field-of-view provides up to 8,250 square feet of coverage at a 40 foot mounting height
  - 8-20 foot and 20-40 foot lenses plus aisle way masks included
- For 0-10V dimming or switching-only fixtures
- Operating Modes:
  - Occupancy (Auto-ON / Auto-OFF)
  - Photocell Only (ignores occupancy, controls lighting based on ambient light levels)
- Daylight control modes:
  - Disabled (no daylighting response)
  - Ambient light hold OFF (switching)
  - Daylight harvesting (0-10V continuous dimming)
  - Daylight Transition Lighting (reverse daylight harvesting)
- Out-of-the-box configuration default mode:
  - Auto-ON/Auto-OFF with 20-minute timeout
  - Sensitivity set to high
  - Daylight harvesting with auto-calibration enables (**Note:** lights are held ON for 24 hours)
- Configuration is made using the Leviton Smart Sensor App on any Bluetooth-enabled Android or iOS device
- ioXt Certified Models:
  - OFD1Z-ISW
  - OFDUZ-ISW
  - ZLD1Z-IOW
  - ZLDUZ-IOW
- UV stable plastic

Leviton Manufacturing Co., Inc. Global Headquarters
201 North Service Road, Melville, NY 11747-3138 **tel** 800-323-8920 **tech line** (8:00AM-10:00PM ET Mon-Fri, 9:00AM-7:00PM ET Sat, 9:00AM-5:00PM ET Sun) 800-824-3005
©2025 Leviton Manufacturing Co., Inc. All rights reserved. Subject to change without notice.

Dimensions Diagram ZLD1Z

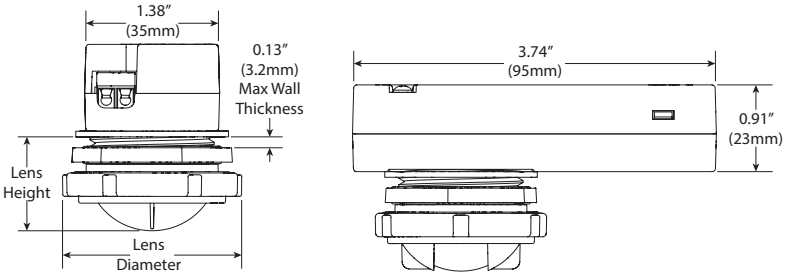

Lens Dimensions		
	Low Bay Lens	High Bay Lens
Lens Diameter	1.84" (46.7mm)	2.86" (72.6mm)
Lens Height	1.08" (27mm)	1.45" (36.8mm)

Dimensions Diagram ZLDUZ

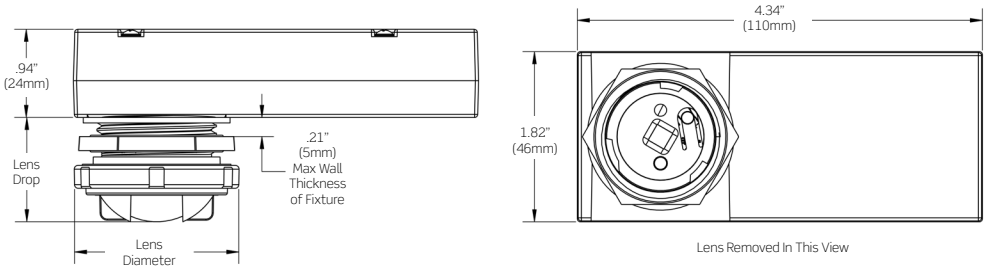

Lens Dimensions		
	Low Bay Lens	High Bay Lens
Lens Diameter	1.84" (46.7mm)	2.86" (72.6mm)
Lens Height	1.17" (39.1mm)	1.54" (39.1mm)

Dimensions Diagram OFD1Z and OFDUZ

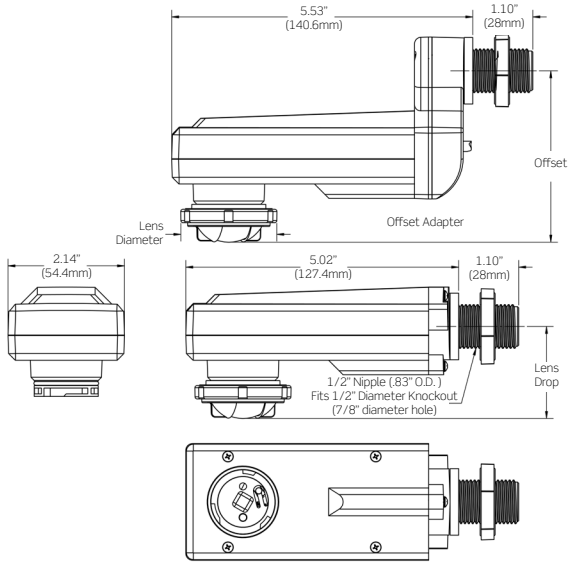

Lens Dimensions		
	Low Bay Lens	High Bay Lens
Lens Diameter	1.84" (46.7mm)	2.86" (72.6mm)
Lens Drop Straight Adapter	1.69" (42.9mm)	2.06" (52.3mm)
Lens Drop Offset Adapter	3.14" (79.9mm)	3.51" (89.3mm)

Wiring Diagrams ZLD1Z

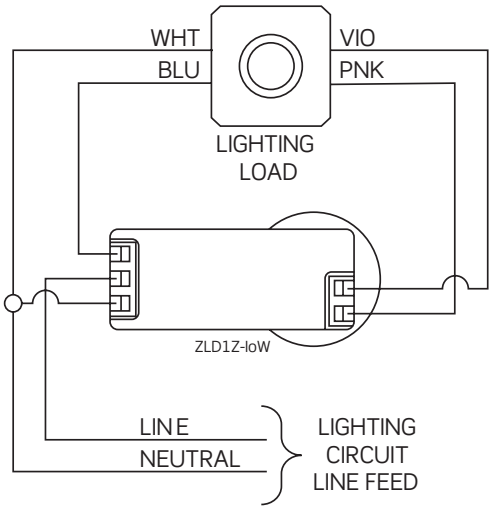

Wiring Diagram OFD1Z

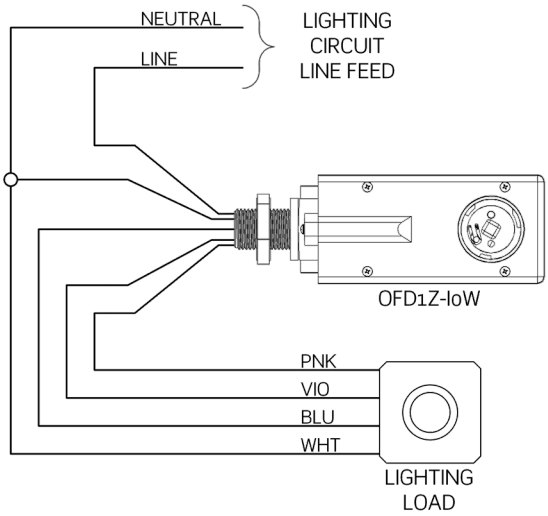

Wiring Diagrams ZLDUZ/OFDUZ

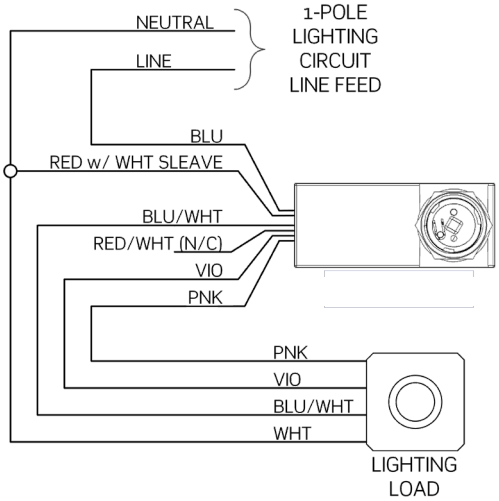

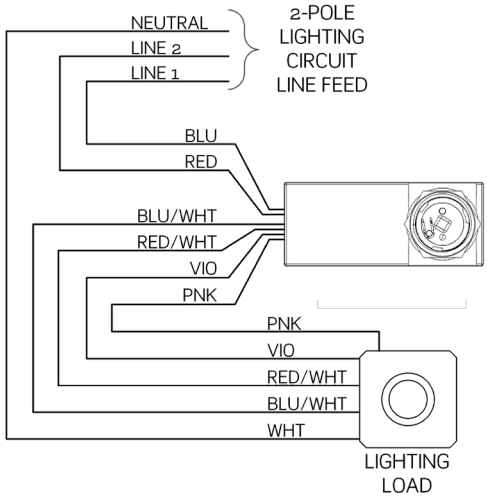

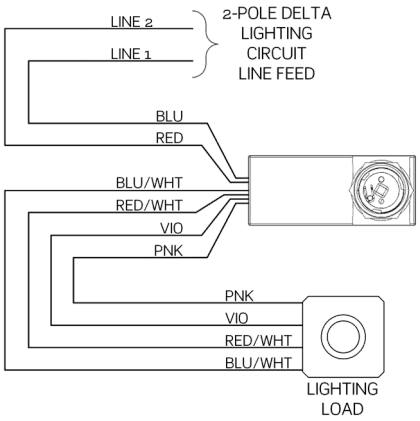

Leviton Manufacturing Co., Inc. Global Headquarters
201 North Service Road, Melville, NY 11747-3138 **tel** 800-323-8920 **tech line** (8:00AM-10:00PM ET Mon-Fri, 9:00AM-7:00PM ET Sat, 9:00AM-5:00PM ET Sun) 800-824-3005
©2025 Leviton Manufacturing Co., Inc. All rights reserved. Subject to change without notice.

Field of View Diagrams—Low Bay Lens

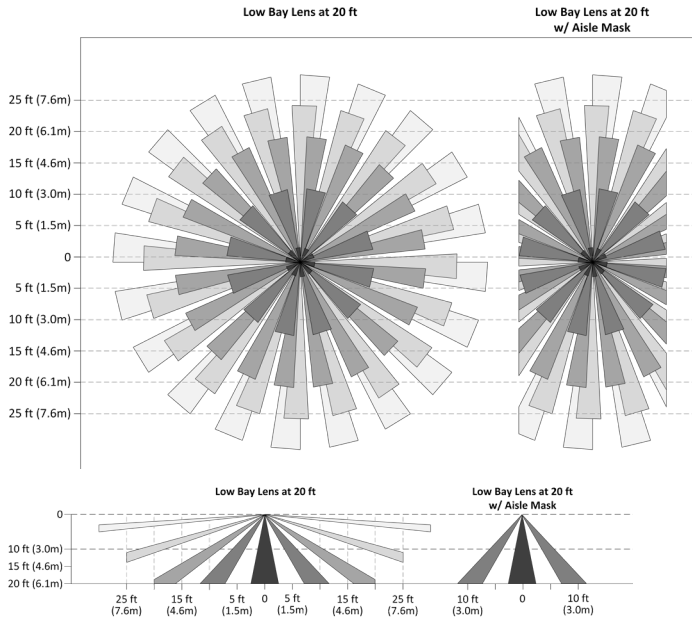

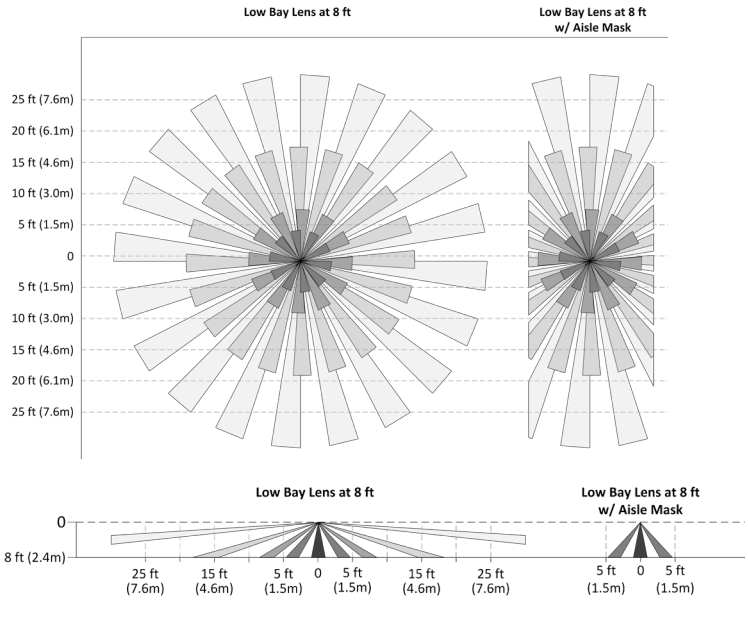

Field of View Diagrams—High Bay Lens

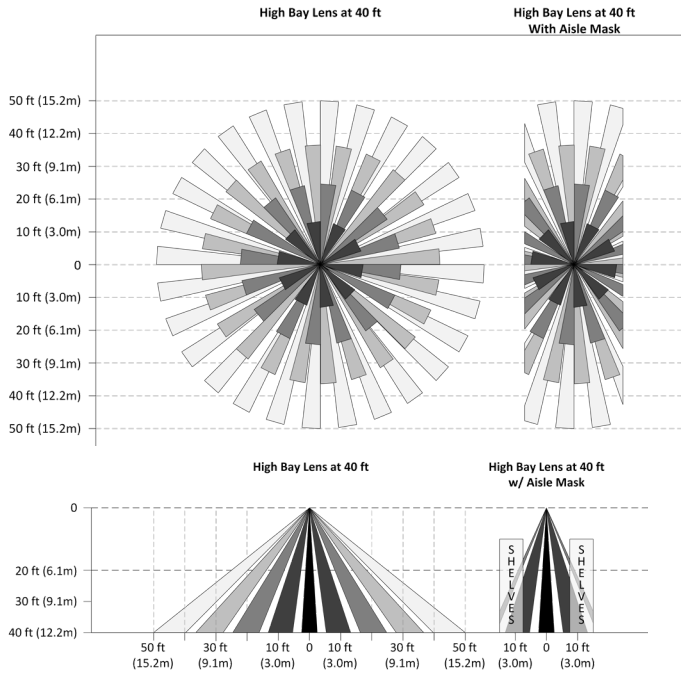

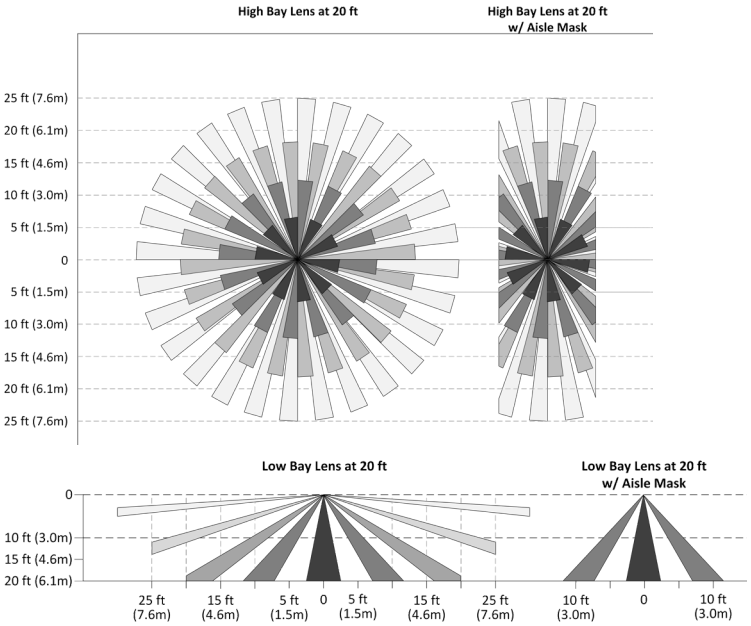

Mounting Height (Ft.)	Field of View Lens	Major (Sq.Ft.)	Minor (Sq.Ft.)
8	Low Bay	2050	900
15		1750	750
20		1850	350
20	High Bay	2300	1050
30		5300	800
40		8250	550

Specifications

Electrical	ZLD1Z	OFD1Z	OFDUZ	ZLDUZ
Input Voltage Frequency (VAC 60 Hz)	120, 230,277		120, 208,230,240,277,347,480	
Input Current (mA)	30mA @ 120VAC, 60Hz; 50mA @ 208VAC, 60Hz, 60mA @ 240VAC, 60Hz; 70mA @ 277VAC, 60Hz		15mA @ 120VAC, 60Hz; 25mA @ 208VAC, 60Hz; 30mA @ 240VAC, 60Hz; 35mA @ 277VAC, 60Hz; 43mA @ 347VAC, 60Hz; 60mA @ 480VAC, 60Hz	
Standby	5mA			
Load Ratings - All Load Types				
120 VAC (1-Pole)	6.7A (800W)			
208 VAC (2-Pole)	—		5.0A (1150W)	
230 VAC (1-Pole)	5.0A (1150W)			
240 VAC (2-Pole)	—		5.0A (1200W)	
277 VAC (1-Pole)	5.0A (1400W)			
347 VAC (1-Pole)	—		5.0A (1700W)	
480 VAC (2-Pole)	—		5.0A (2400W)	
Motor 120-480 VAC	1/3 HP			
0-10V Dimming Control	50 mA (Sinking)			
Wire Lead Length	Terminals	30 Inches (762mm)		
Environmental				
Operating Temperature	-40° to 167° F (-40° to 75° C)			
Storage Temperature	-40° to 185° F (-40° to 85° C)			
Relative Humidity	0% to 90% RH, non-condensing			
Rating	IP66 (Type 3R)			
Pollution Degree	2			
Other				
Certifications	ioXT			
Energy Codes	Can be used to comply with IECC, ASHRAE 90.1, and 2022 Title 24, Part 6 occupancy/vacancy sensing and dimming requirements			
Dimensions	Width: 1.39" (35.3 mm) Length: 3.75" (95.3 mm) Depth: 0.91" (23 mm)	Width: 2.14" (54.4 mm) Length: 6.12-6.63" (155.4-168.6 mm) Depth: 1.61" (41.0 mm)	Width: 2.14" (54.4 mm) Length: 6.12-6.63" (155.4-168.6 mm) Depth: 1.61" (41.0 mm)	Width: 1.80" (46.0 mm) Length: 3.80" (96.5 mm) Depth: 0.94" (24.0 mm)

Leviton Manufacturing Co., Inc. Global Headquarters
201 North Service Road, Melville, NY 11747-3138 **tel** 800-323-8920 **tech line** (8:00AM-10:00PM ET Mon-Fri, 9:00AM-7:00PM ET Sat, 9:00AM-5:00PM ET Sun) 800-824-3005
©2025 Leviton Manufacturing Co., Inc. All rights reserved. Subject to change without notice.

Ordering Information

Smart IP66 PIR Integrated Fixture Mount Sensor	
Cat. No.	**Description**
ZLD1Z-I0W	Dimming Daylight Harvesting PIR Occupancy Sensor; Internal Fixture Mount; 120-277VAC 50/60 Hz; IP66 Rating for High and Low-Temp, Water Tight, Indoor/Outdoor; Single Zone 0-10V Dimming, 120-277VAC single-pole 5A relay; 8-20' Lens and 20-40' lens included, bulk pack, 25/case
ZLDUZ-I0W	Dimming Daylight Harvesting PIR Occupancy Sensor; Internal Fixture Mount; Universal Voltage 120-480VAC 50/60 Hz; IP66 Rating for High and Low-Temp, Water Tight, Indoor/Outdoor; Single Zone 0-10V Dimming, 120-347VAC 2-pole 5A relay; 8-20' Lens and 20-40' lens included, bulk pack, 25/case
OFD1Z-I0W	Dimming Daylight Harvesting PIR Occupancy Sensor; End/Fixture Mount; 120-277VAC 50/60 Hz; IP66 Rating for High and Low-Temp, Water Tight, Indoor/Outdoor; Single Zone 0-10V Dimming, 120-277VAC single-pole 5A relay; 8-20' Lens and 20-40' lens included, bulk pack, 25/case
OFD1Z-ISW	Dimming Daylight Harvesting PIR Occupancy Sensor; End/Fixture Mount; 120-277VAC 50/60 Hz; IP66 Rating for High and Low-Temp, Water Tight, Indoor/Outdoor; Single Zone 0-10V Dimming, 120-277VAC single-pole 5A relay; 8-20' Lens and 20-40' lens included, individually boxed
OFDUZ-I0W	Dimming Daylight Harvesting PIR Occupancy Sensor; End/Fixture Mount; Universal Voltage 120-480VAC 50/60 Hz; IP66 Rating for High and Low-Temp, Water Tight, Indoor/Outdoor; Single Zone 0-10V Dimming, 120-347VAC 2-pole 5A relay; 8-20' Lens and 20-40' lens included, bulk pack, 25/case
OFDUZ-ISW	Dimming Daylight Harvesting PIR Occupancy Sensor; End/Fixture Mount; Universal Voltage 120-480VAC 50/60 Hz; IP66 Rating for High and Low-Temp, Water Tight, Indoor/Outdoor; Single Zone 0-10V Dimming, 120-347VAC 2-pole 5A relay; 8-20' Lens and 20-40' lens included, individually boxed

Leviton Manufacturing Co., Inc. Lighting & Controls
10385 SW Avery Street, Tualatin, OR 97062 **tel** 800-736-6682 **tech line** (6:00AM-4:00PM PT Mon-Fri) 800-959-6004

Leviton Manufacturing Co., Inc. Global Headquarters
201 North Service Road, Melville, NY 11747-3138 **tel** 800-323-8920 **tech line** (8:00AM-10:00PM ET Mon-Fri, 9:00AM-7:00PM ET Sat, 9:00AM-5:00PM ET Sun) 800-824-3005

Visit our Website at: www.leviton.com/integratedcontrols
©2025 Leviton Manufacturing Co., Inc. All rights reserved. Subject to change without notice.

LES-G-10602G/J25-aa
REV OCT 2025